ALL DESIGN, OPERATIVE AND PROCESS DATA PERTAINING TO THE ARTICLE SHOWN ON THIS SHEET IS THE PROPERTY OF POLYPHASER CORPORATION. THE INFORMATION IS NOT TO BE COPIED, REPRODUCED, REVEALED TO OR APPROPRIATED BY OTHERS WITHOUT THE EXPRESS WRITTEN CONSENT OF POLYPHASER CORPORATION.

REVISIONS				
REV LTR	DATE	ENG	MKTG	Q.A.
C	12/07/04 SH	KCB	SD	LJ

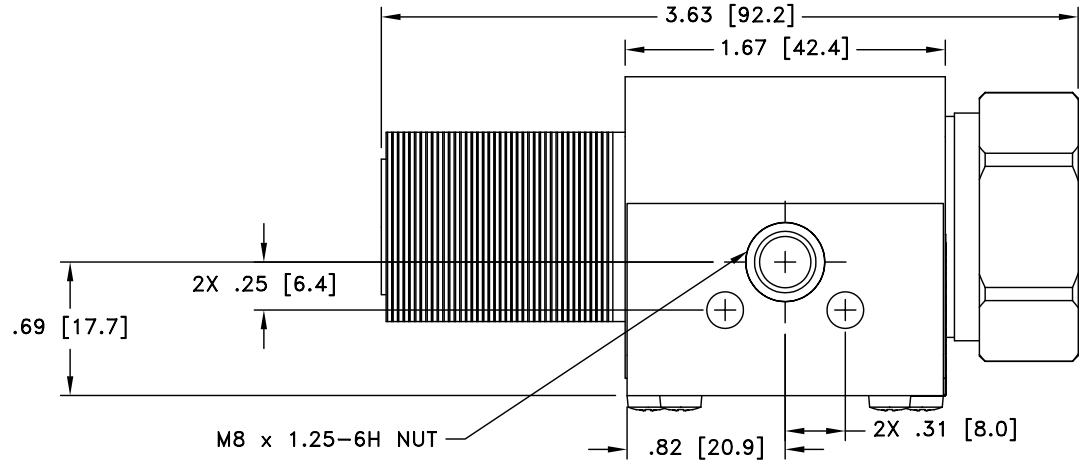

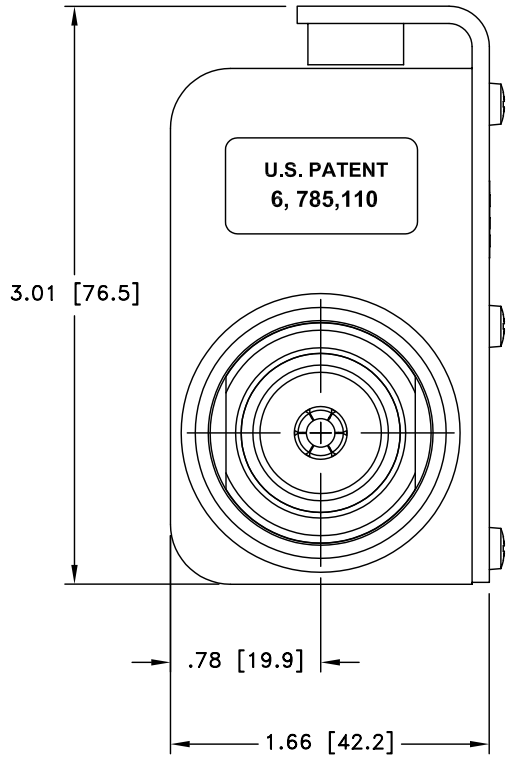

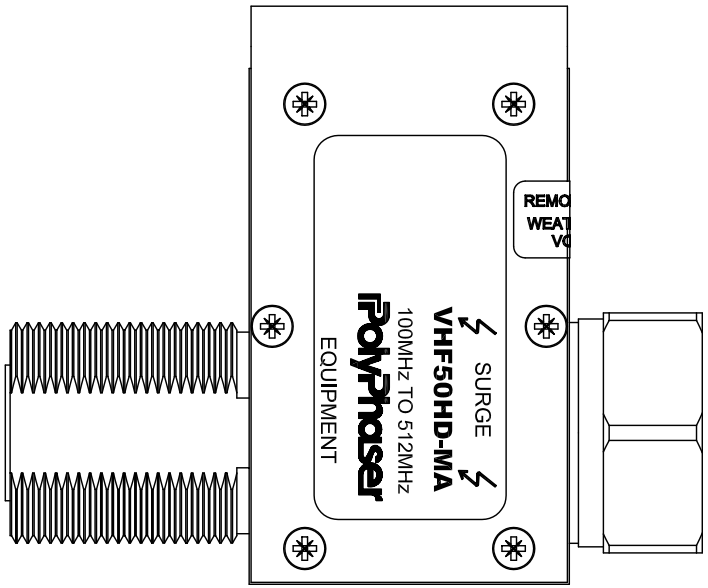

MAXIMUM CHARACTERISTICS

APPLICATION:
WEATHERIZED, FLANGE OR BULKHEAD MOUNT

FREQUENCY RANGE:
100MHz TO 512MHz

VSWR:
≤1.1:1 OVER FREQUENCY RANGE

INSERTION LOSS:
≤0.1dB OVER FREQUENCY RANGE

POWER:
750W RMS AVERAGE

MAX. SURGE:
20kA IEC 61000-4-5 8/20µs WAVEFORM

THROUGHPUT ENERGY:
≤500nJ FOR 3kA, 8/20µs WAVEFORM

RELATIVE HUMIDITY:
TO 95%

ENVIRONMENTAL:
MEETS IEC 60529 IP67
MEETS BELLCORE #TA-NWT-000487
PROCEDURE 4.11, WIND DRIVEN (120MPH)
RAIN INTRUSION TEST.

TEMPERATURE:
-50°C TO +85°C STORAGE/OPERATING

CUSTOMER APPROVAL: _____ DATE: _____

ALL DIMENSIONS SHOWN ABOVE ARE FOR REFERENCE ONLY.

DRAFTER S. HALL	DATE 06/20/03	PolyPhaser
MECH ENGINEER R. DUNNING	DATE 06/27/03	P.O. BOX 9000 MINDEN, NV 89423 TEL: 775-782-2511 FAX: 775-782-4476
ELEC ENGINEER N. TOPCU	DATE 06/26/03	DWG NO/PART NO/DESCRIPTION VHF50HD-MA CUSTOMER PRINT
MARKETING S. DOTTER	DATE 06/27/03	
QUALITY DEPT L. JACQUES	DATE 06/26/03	CAGE CODE 61114 · FILE NAME -C1 · SCALE 1/1 · SHEET 1 OF 1